AMD ZEN2 Microarchitecture

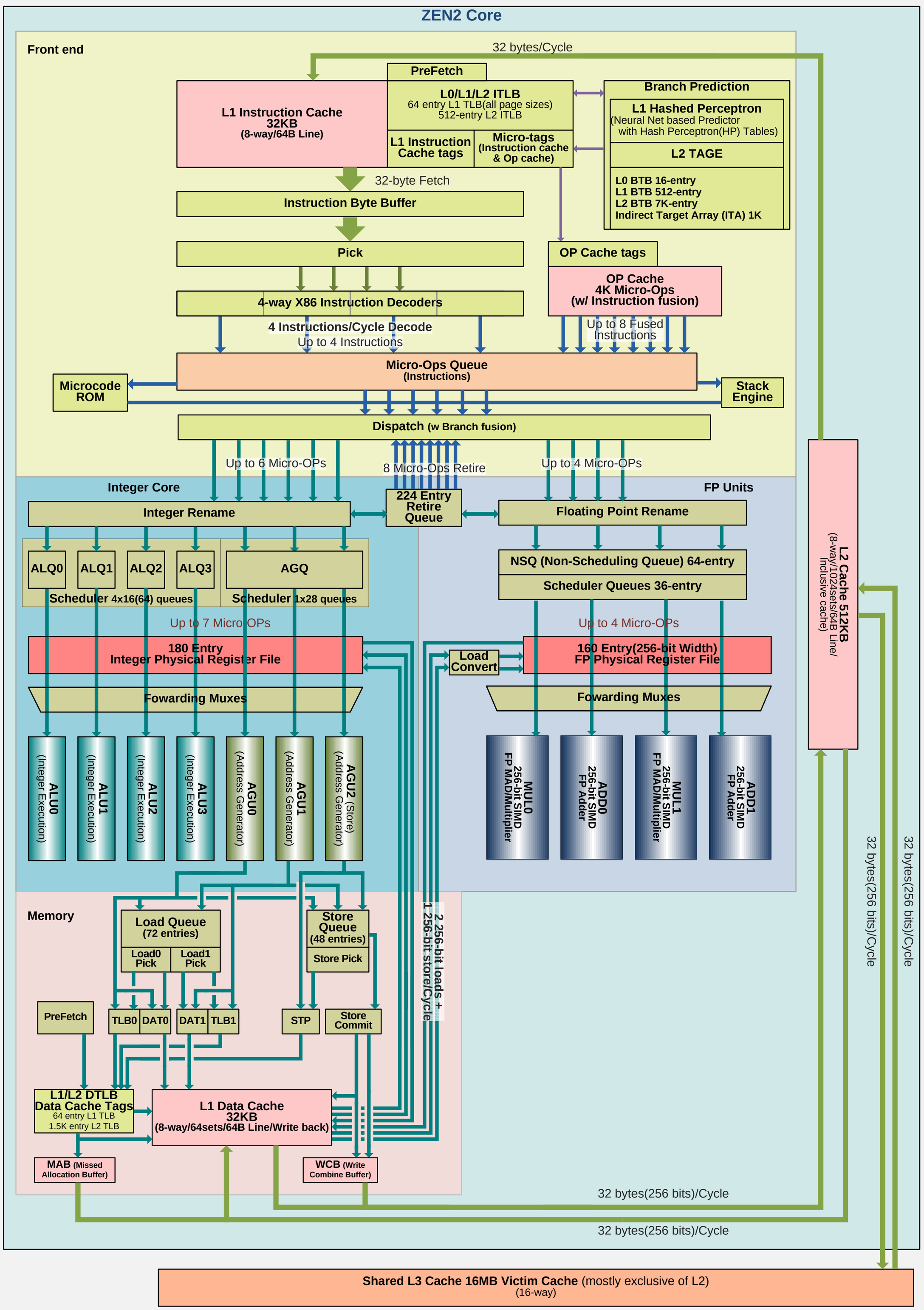

Copyright (c) 2019 Hiroshige Goto All rights reserved.